VIVA COMPUTER COMPANY
H757BF

Q1/94

Data bus:	16-bit, ISA
Size:	Half-length, half-height card
Hard drive supported:	Two IDE (AT) Interface drives
Floppy drives supported:	Two 360KB, 720KB, 1.2MB, or 1.44MB drives

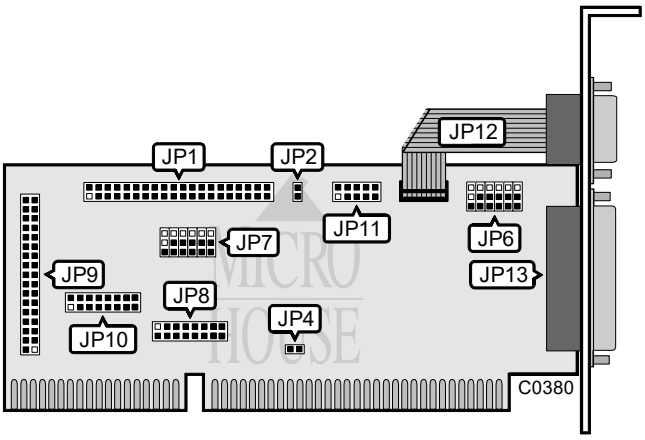

CONNECTIONS	
Function	Location
40-pin IDE(AT) Interface connector	JP1
2-pin connector - Drive active LED	JP2
34-pin control cable connector - floppy drive	JP9
15-pin game port - internal	JP10
10-pin serial port (COM2/4) - internal	JP11
10-pin serial port (COM1/3) - external	JP12
25-pin parallel port (LPT1/2) - external	JP13

USER CONFIGURABLE SETTINGS		
Function	Location	Setting
í Parallel port is uni-directional	JP4	closed
Parallel port is bi-directional	JP4	open
í Hard drive port address is 3F6, 3F7, 1F0-1F7h	JP7/Jumper 1	pins 1 & 2 closed
Hard drive port address is 376, 377, 170-177h	JP7/Jumper 1	pins 2 & 3 closed
í Floppy drive booting sequence is A:/ B:	JP7/Jumper 2	pins 2 & 3 closed
Floppy drive booting sequence is B:/A:	JP7/Jumper 2	pins 1 & 2 closed
í Floppy drive port address is 3F0-3F7h	JP7/Jumper 3	pins 1 & 2 closed
Floppy drive port address is 370-377h	JP7/Jumper 3	pins 2 & 3 closed
í Hard drive enabled	JP7/Jumper 4	pins 2 & 3 closed
Hard drive disabled	JP7/Jumper 4	pins 1 & 2 closed

Continued on next page . . .

Copyright © 1991, 1992, 1993, 1994 by Micro House Int'l (800) 926-8299. Tech Support: (303) 443-3389.

VIVA COMPUTER COMPANY
H757BF

. . . continued from previous page

USER CONFIGURABLE SETTINGS		
Function	Location	Setting
í Floppy drive enabled	JP7/Jumper 5	pins 2 & 3 closed
Floppy drive disabled	JP7/Jumper 5	pins 1 & 2 closed
í AT mode enabled	JP7/Jumper 6	pins 2 & 3 closed
XT mode enabled	JP7/Jumper 6	pins 1 & 2 closed

SERIAL PORT 1 (JP12) CONFIGURATION		
COM	JP6/Jumper 1	JP6/Jumper 2
í COM1	pins 2 & 3 closed	pins 1 & 2 closed
COM3	pins 1 & 2 closed	pins 2 & 3 closed
COM4	pins 2 & 3 closed	pins 2 & 3 closed
Disabled	pins 1 & 2 closed	pins 1 & 2 closed

SERIAL PORT 2 (JP11) CONFIGURATION		
COM	JP6/Jumper 3	JP6/Jumper 4
COM2	pins 2 & 3 closed	pins 1 & 2 closed
COM3	pins 2 & 3 closed	pins 2 & 3 closed
COM4	pins 1 & 2 closed	pins 2 & 3 closed
Disabled	pins 1 & 2 closed	pins 1 & 2 closed

PARALLEL PORT (JP13) CONFIGURATION		
LPT	JP6/Jumper 5	JP6/Jumper 6
LPT1	pins 2 & 3 closed	pins 2 & 3 closed
í LPT2	pins 1 & 2 closed	pins 2 & 3 closed
LPT3	pins 2 & 3 closed	pins 1 & 2 closed
Disabled	pins 1 & 2 closed	pins 1 & 2 closed

SERIAL PORT 1 (JP12) INTERRUPT REQUEST			
IRQ	JP8/Jumper 1	JP8/Jumper 2	JP8/Jumper 3
í IRQ4	closed	open	open
IRQ3	open	closed	open
IRQ5	open	open	closed

SERIAL PORT 2 (JP11) INTERRUPT REQUEST			
IRQ	JP8/Jumper 4	JP8/Jumper 5	JP8/Jumper 6
í IRQ3	closed	open	open
IRQ4	open	closed	open
IRQ5	open	open	closed

PARALLEL PORT (JP13) INTERRUPT REQUEST		
IRQ	JP8/Jumper 7	JP8/Jumper 8
í IRQ7	closed	open
IRQ5	open	closed